INSTALLATION AND MAINTENANCE INSTRUCTIONS

HM201-R

Addressable Output Module

NOTICE: This manual should be left with the owner/user of this equipment.

GENERAL DESCRIPTION

The output module can be installed in a single gang junction box directly behind the monitored unit. Its small size and light weight allow it to be installed without rigid mounting. The module is intended for use in addressable, two-wire systems where the individual address of each module is written inside the MCU's EEPROM by the addressable programmer.

The output module has two output modes can be selected:

1. **Relay output mode**: the output module contains a isolated set of form C contacts, which operate as a SPST switch. The module allows the control panel to switch these contacts on command. No supervision is provided for the notification appliance circuit.

2. **Power output mode**: the output module provides supervised monitoring of wiring to load devices that require an external power supply to operate, such as horns, strobes, or bells. It is capable of Class A and Class B supervision. Upon command from the control panel, the output module will disconnect the supervision and connect the external power supply across the load device. The disconnection of the supervision provides a verification to the panel that the control relay actually turned on. The external power supply is always relay isolated from the communication loop, so that a trouble condition on the power supply will never interfere with the rest of the system. Full analog measurement of the supervised wiring is transmitted back to the panel and can be used to detect impedance changes or other special test functions.

Compatibility Requirements

To ensure proper operation, this module should only be connected to a compatible control panel.

SPECIFICATIONS

Loop Voltage:	16 to 28VDC
External power supply:	16 to 32VDC
Standby Current:	450uA@28VDC（Maximum）
Alarm Current:	5mA (With LED latched on)
Relay contacts:	2A@30VDC(Maximum)
End of line resistance:	47kΩ (In power output mode)
External supply standby current:	<2mA (In power output mode)
Power output capability:	2A@24VDC (maximum) (In power output mode)
Operating Temp:	-10℃ to +50℃
Operating Humidity Range:	10% to 93% Relative Humidity, Non-condensing
Dimension of module:	73 mm L x 50mm W x 26mm H
Dimension of cover:	87mm x 87mm
Weight:	53g (without cover), 81g (with cover)



Figure 1: Output module with cover
Output module

MADE BY H LOGIC SECURITY TECHNOLOGY

INSTALLATION WIRING

Before Installing

This information is included as a quick reference installation guide. Refer to the control panel installation manual for detailed system information. If the modules will be installed in an existing operational system, inform the operator and local authority that the system will be temporarily out of service. Disconnect power to the control panel before installing the modules.

Installation Dimensions

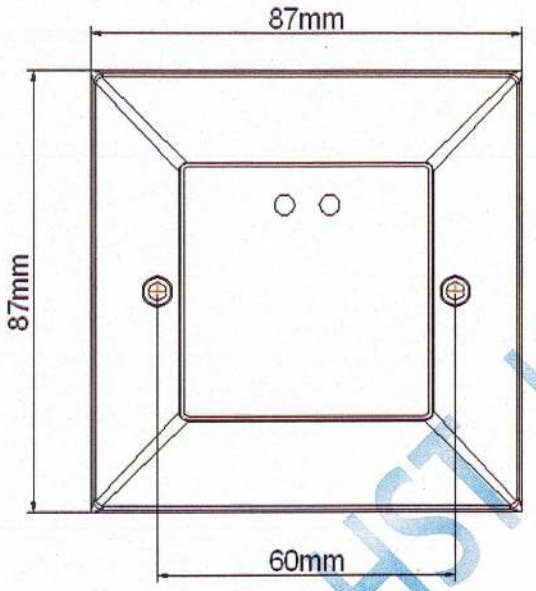

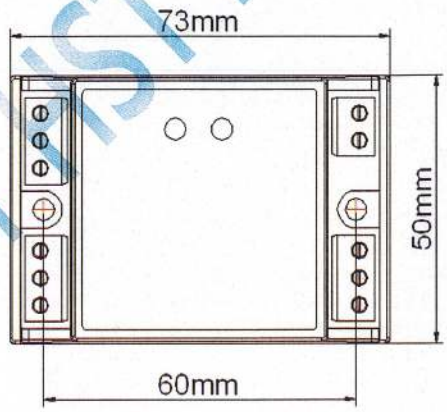

Figure 2: Install with cover **Install module without cover**

Connection Details

Terminal	Description
L+	Loop+
E1	Earth
L-	Loop-
V+	External power+
E2	External earth
V-	External power-
P+	Power output+
P-	Power output-
NO	Relay contact: NO
C	Relay contact: COM

HST HST HST HST HST HST

MADE BY H LOGIC SECURITY TECHNOLOGY

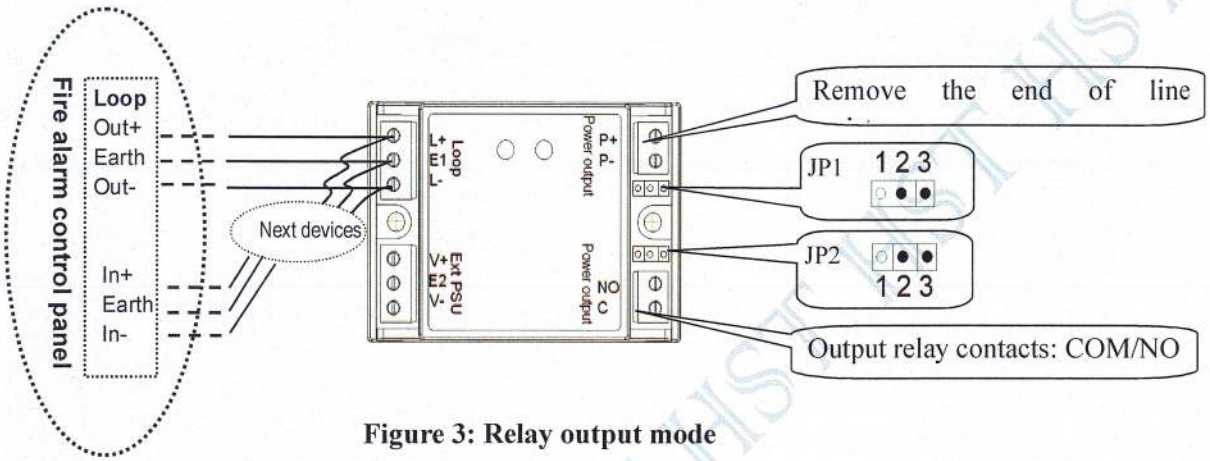

Figure 3: Relay output mode

Connection of relay output mode:

NOTE: This module is intended to be wired and mounted without rigid connections inside a standard electrical box. All wiring must conform to applicable local codes, ordinances, and regulations. Written the address of module before mounting and wiring by programmer.

1. Set the pin2 and pin3 of the jumper JP1 and JP2 to connected on the module as figure 3.
2. Connect the loop (+) and loop (–) wires to the Terminal L+ and Terminal L-.
3. Connect the Earth wire to Terminal E1.
4. Connect the Terminal C and Terminal NO to appliance circuit.
5. Program the address on the module per job drawings.
6. Install the module in the desired mounting location.

HST HST HST HST HST HST

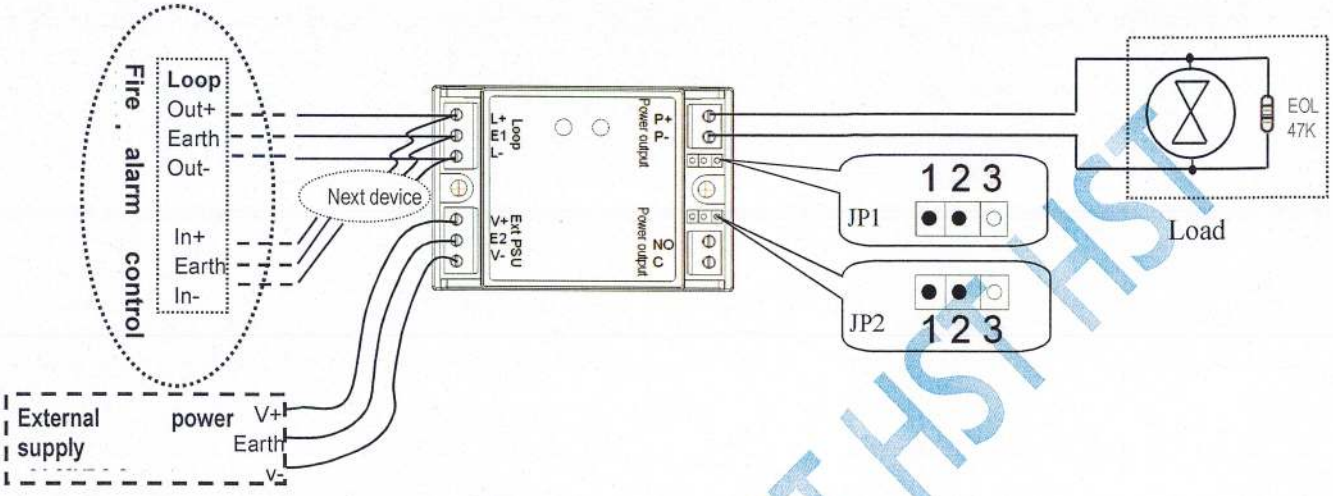

Figure 4: Power output mode

Connection of power output mode:

NOTE: This module is intended to be wired and mounted without rigid connections inside a standard electrical box. All wiring must conform to applicable local codes, ordinances, and regulations. Written the address of module before mounting and wiring by programmer.

1. Set the pin 1 and pin 2 of the jumper JP1 and JP2 to connected on the module as figure 4.
2. Connect the loop (+) and loop (–) wires to the Terminal L+ and Terminal L-.
3. Connect the Earth wire to Terminal E1.
4. Connect the external power supply (+) and (–) wires to the Terminal V+ and Terminal V-.
5. Connect the earth of external power supply wire to Terminal E2.
6. Connect the terminal P+ and P- to load device with the end of line resistance.
7. Program the address on the module per job drawings.
8. Install the module in the desired mounting location.

MAINTENCE

Apart from regular testing of the output module, as part of the scheduled maintenance of the fire alarm system, no additional maintenance is required.

HST HST HST HST HST

MADE BY H LOGIC SECURITY TECHNOLOGY