SA40

Simple A&C Standalone Device Supporting RFID & Password Authentication

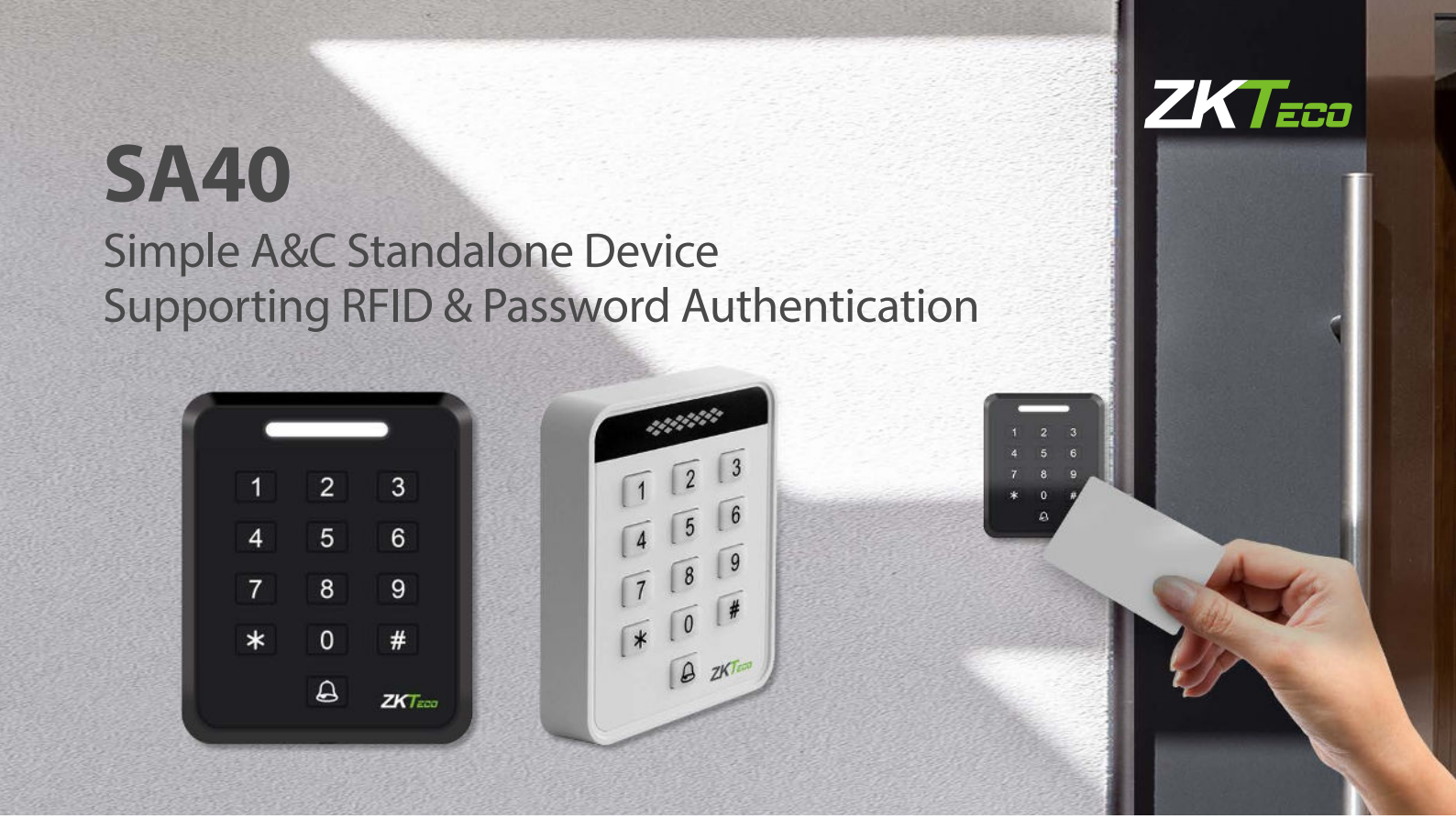

SA40 is a Simple A&C standalone device that supports password and RFID authentication for access control. It supports three different verification modes: password, RFID, password & RFID. Users can be added and deleted in the device, which is very convenient.

Features

- Password Length: 4 to 6 digits
- RFID: 125kHz EM Card / 13.56MHz IC card, S50 S70, IC EV1
- Operating Temperature: -20°C to 60°C
- Humidity Storage: 15% to 90%

Specifications

Model	SA40
Operating Frequency	125kHz / 13.56MHz
RFID Type	EM Card / IC Card, S50 S70 IC EV1
Operating Voltage	DC 9 to 15V
Operating Temperature	-20°C to 60°C
Storage Temperature	-20°C to 80°C
Operating Humidity	15% to 90%
Storage Humidity	15% to 90%
A&C Standalone	User Capacity: 2,000 Password Capacity: 2,000 Password: 4 to 6 digits Verification Modes: Card Only / Password Only / Card and Password 1 Relay / 1 Door Sensor / 1 Exit Button / 1 Doorbell
Dimensions (L*W*H)	103.5*86*19 (mm) (±3mm)

Configuration

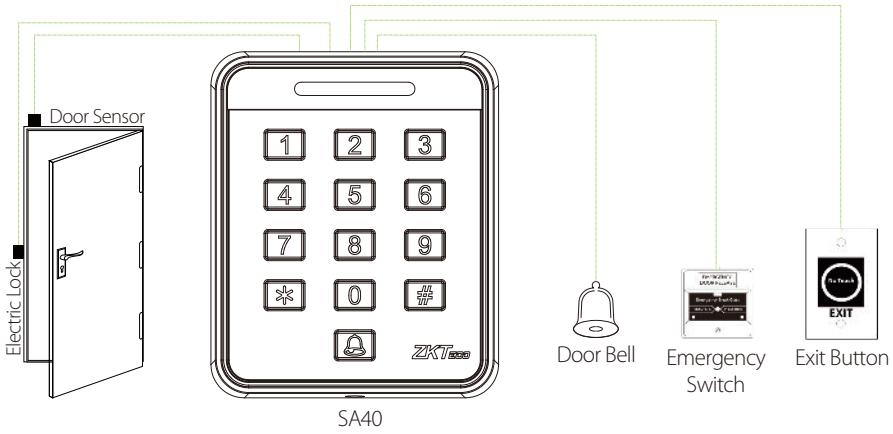

Dimensions (mm)

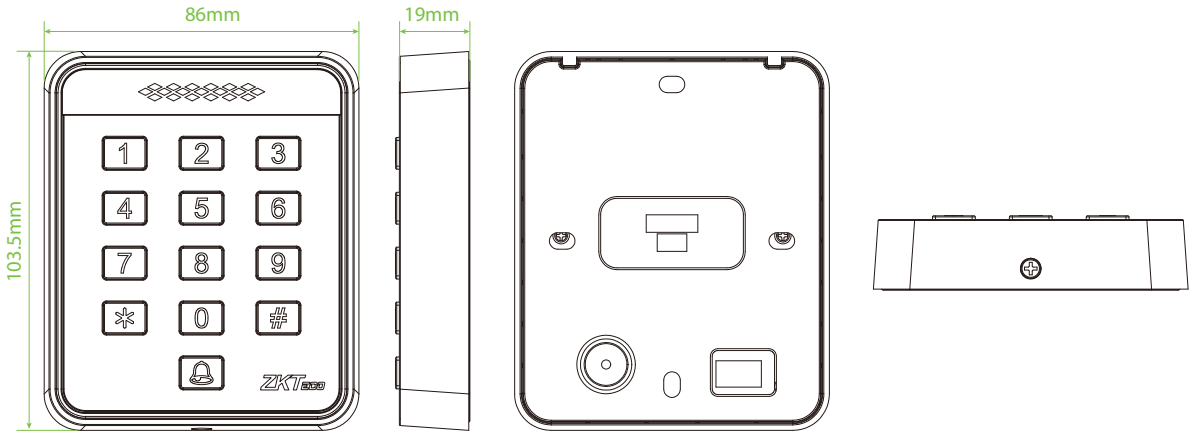

ZKTECO CO.,LTD. www.zkteco.com E-mail: sales@zkteco.com

Copyright © 2021 ZKTECO CO., LTD. All rights reserved.